Alvar

ARMCHAIRS

2026

Antonio Citterio



Description

Alvar is a seating collection born from a reflection on wood, not only as a construction material but as part of a tradition. The project includes an armchair in two versions, one with a low back, the other with a high back, united by a simple language and a construction that connects memory and innovation. The frame is made of oak, left with a matte finish to express a sober material quality, with a nod to a Nordic sensibility. The design integrates elements from Italian tradition, such as the curved armrest of the Chiavarina chair, reinterpreted through a contemporary process. The woodworking, once entirely manual, is now made possible by advanced technologies that allow for precision and formal coherence. A defining element of the collection is the backrest, made of woven cork cord. The intentionally sparse weave introduces a structural tension that contributes to comfort and visual lightness. The armchairs feature a slatted frame with a padded seat. Alvar thus strikes a balance between tradition and modernity, where the design is never a direct reference, but a reinterpretation. A work on memory that is translated into a contemporary object, designed to last and accompany daily use.

Technical information

Technical drawings

AV67PB

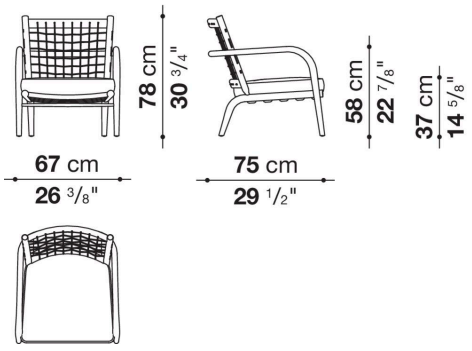

AV67PA

