Papilio Shell

CHAIRS

2015

Naoto Fukasawa



Description

Forming part of the iconic seating collection of the same name, the Papilio Shell chair comes either with a shell entirely in polypropylene or with a shell padded and covered in fabric. The base comes in two versions: with four steel or wooden legs. The shape of the back of Papilio Shell calls to mind the multicoloured wings of a butterfly ready to take flight. It is this detail that inspired the name, “Papilio” being the Latin term for butterfly.

Technical information

Shell
polypropylene
Shell upholstery (PSH1-PSH2)
shaped polyurethane, polyester fibre
Support frame (SH1-PSH1)
steel profiles
Legs (SH2-PSH2)
solid wood
Double-side ferrules
plastic material, felt
Cover (PSH1-PSH2)
fabric in limited categories

Technical drawings

SH1

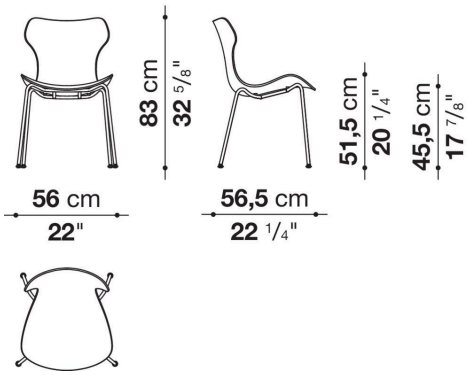

PSH1

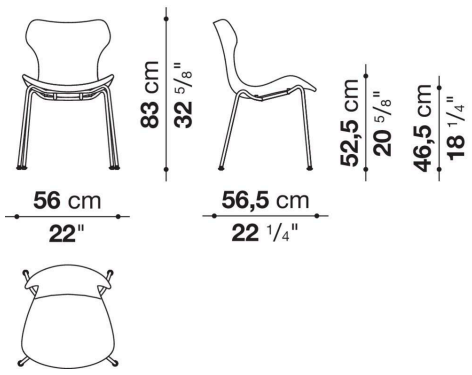

SH2

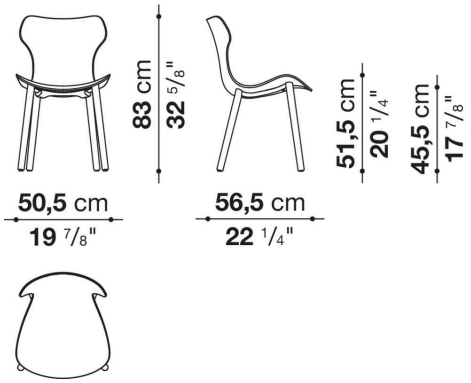

PSH2

